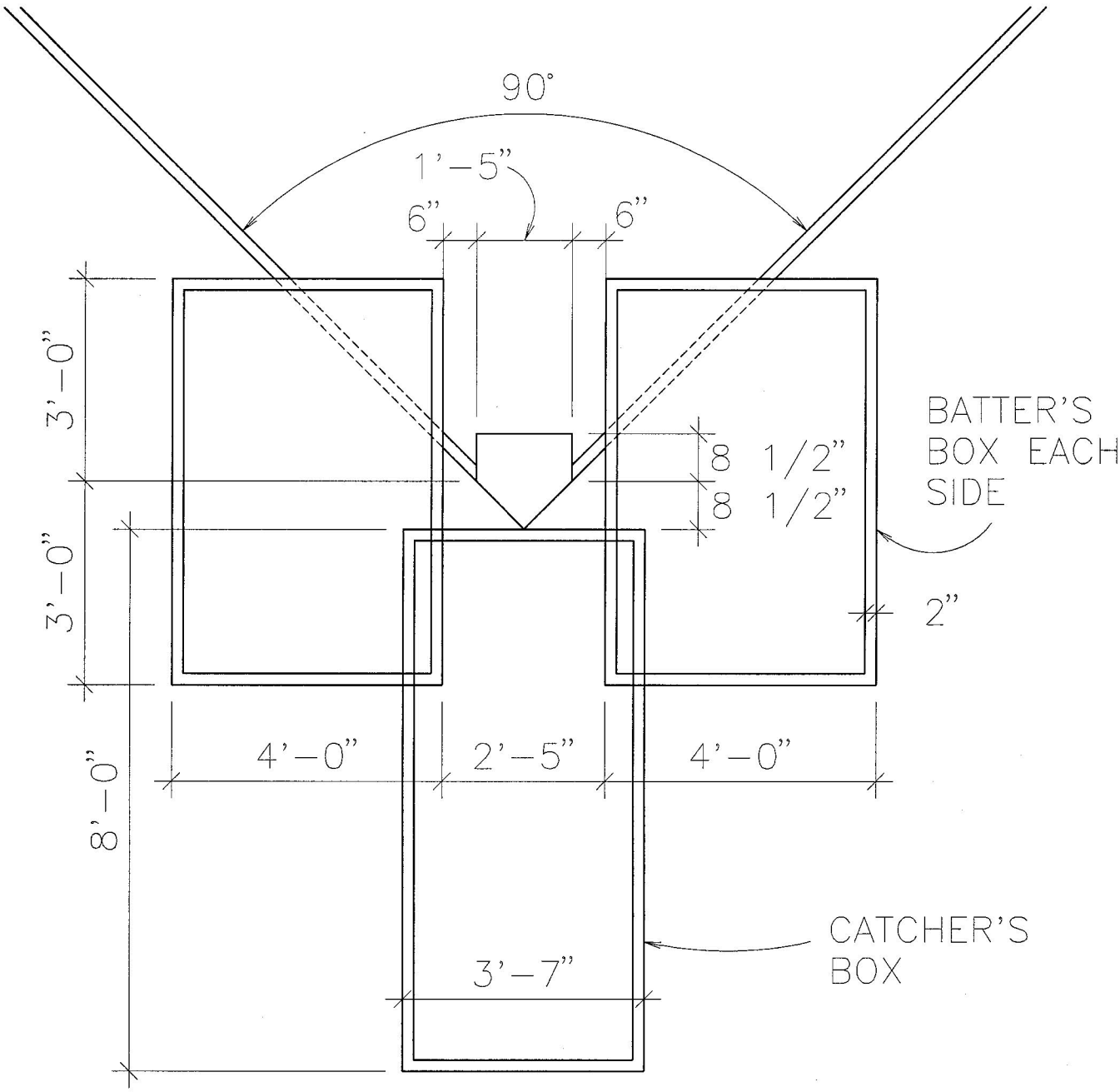

Copyright 2000
Architectural GRAPHIC Standards CD-ROM
John Wiley & Sons, Inc. New York, NY